UNISYS

U 5000/30, U 5000/35, U 5000/50, and U 5000/55

Unpacking Guide

Priced Item

April 1990

Printed in U S America
UP-14792

UNISYS

U 5000/30, U 5000/35, U 5000/50, and U 5000/55

Unpacking Guide

Copyright © 1990 Unisys Corporation
All rights reserved.
Unisys is a registered trademark of Unisys Corporation.

April 1990

Printed in U S America
UP–14792

Priced Item

Any names, places, and/or events used in this publication are not intended to correspond to any individual, group, or association existing, living, or otherwise. Any similarity or likeness of the names, places, and/or events with the names of any individual, living or otherwise, or that of any group or association is purely coincidental and unintentional.

NO WARRANTIES OF ANY NATURE ARE EXTENDED BY THIS DOCUMENT. Any product and related material disclosed herein are only furnished pursuant and subject to the terms and conditions of a duly executed Program Product License or Agreement to purchase or lease equipment. The only warranties made by Unisys, if any, with respect to the products described in this document are set forth in such License or Agreement. Unisys cannot accept any financial or other responsibility that may be the result of your use of the information in this document or software material, including direct, indirect, special, or consequential damages.

You should be very careful to ensure that the use of this information and/or software material complies with the laws, rules, and regulations of the jurisdictions with respect to which it is used.

The information contained herein is subject to change without notice. Revisions may be issued to advise of such changes and/or additions.

UP-14792

Unpacking Procedures

This guide is designed to aid in the unpacking of the U 5000/30, U 5000/35, U 5000/50, or U 5000/55 system. Your system is shipped in a single carton for the model number of the unit. Record the model number in the space below for future reference.

Unisys Model #_____

Before opening your system package, allow the shipping carton to remain in the room of its final destination for 24 hours. This allows the unit to reach room temperature and prevent condensation buildup that could cause damage.

Before unpacking your system, inspect it for visible damage. In particular, look at the TIP-N-TELL Sticker. If it indicates blue in the triangular area, then the container has been dropped or tipped over in transit.

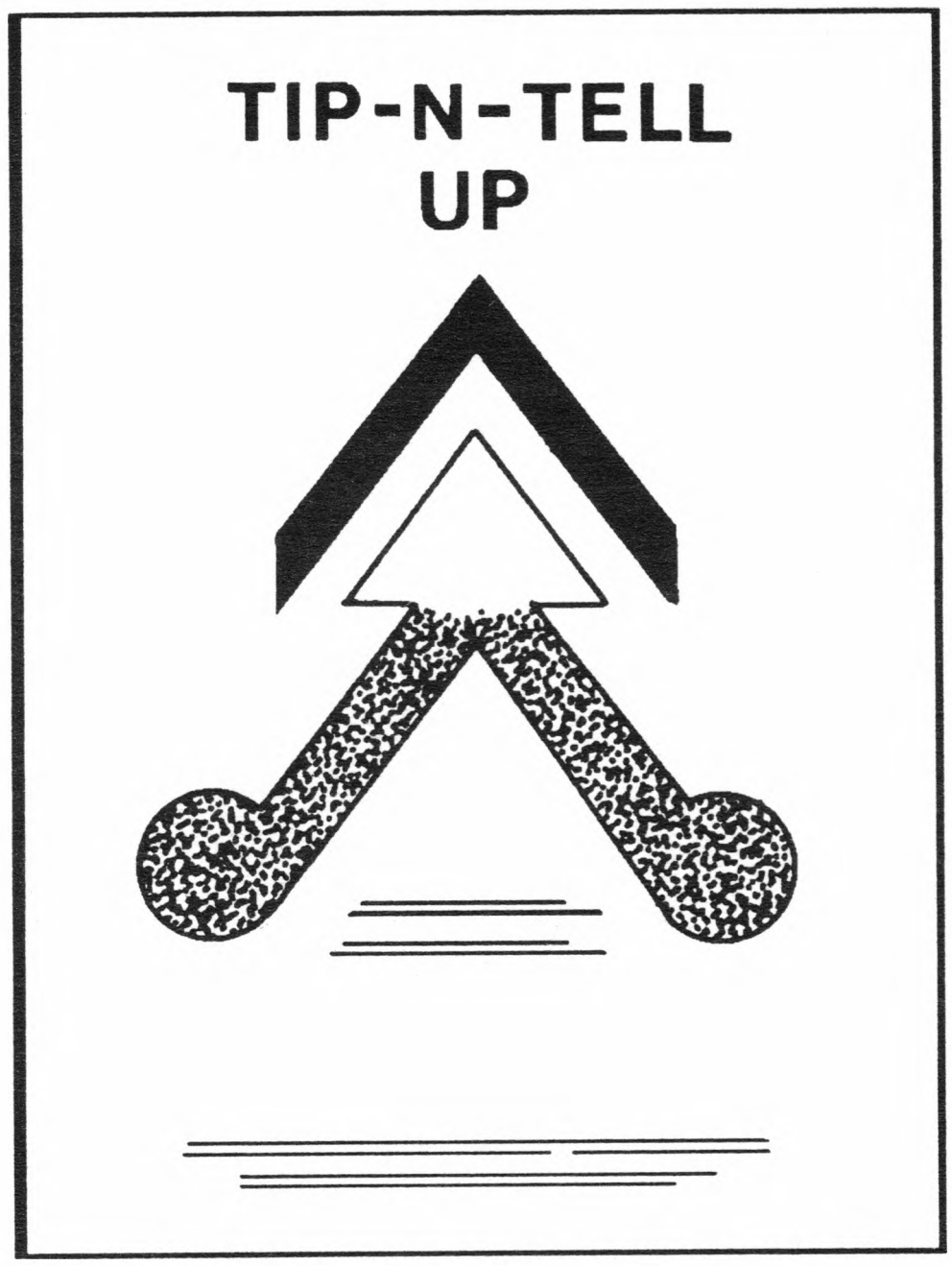

Make a note on the Bill of Lading that hidden damage may have occurred. Also note any visible damage to the shipping containers. If the system is visibly damaged, contact the freight forwarder and your Unisys representative immediately to resolve any insurance claims before proceeding further with the unpacking procedure.

Unpacking a U 5000/30/35/50/55 System

Once you have selected and prepared a suitable site for your system you are ready to unpack the unit.

1. With the shipping carton in the upright position (arrows pointed upward), cut the straps around the carton. Set aside all packing materials for possible future use.

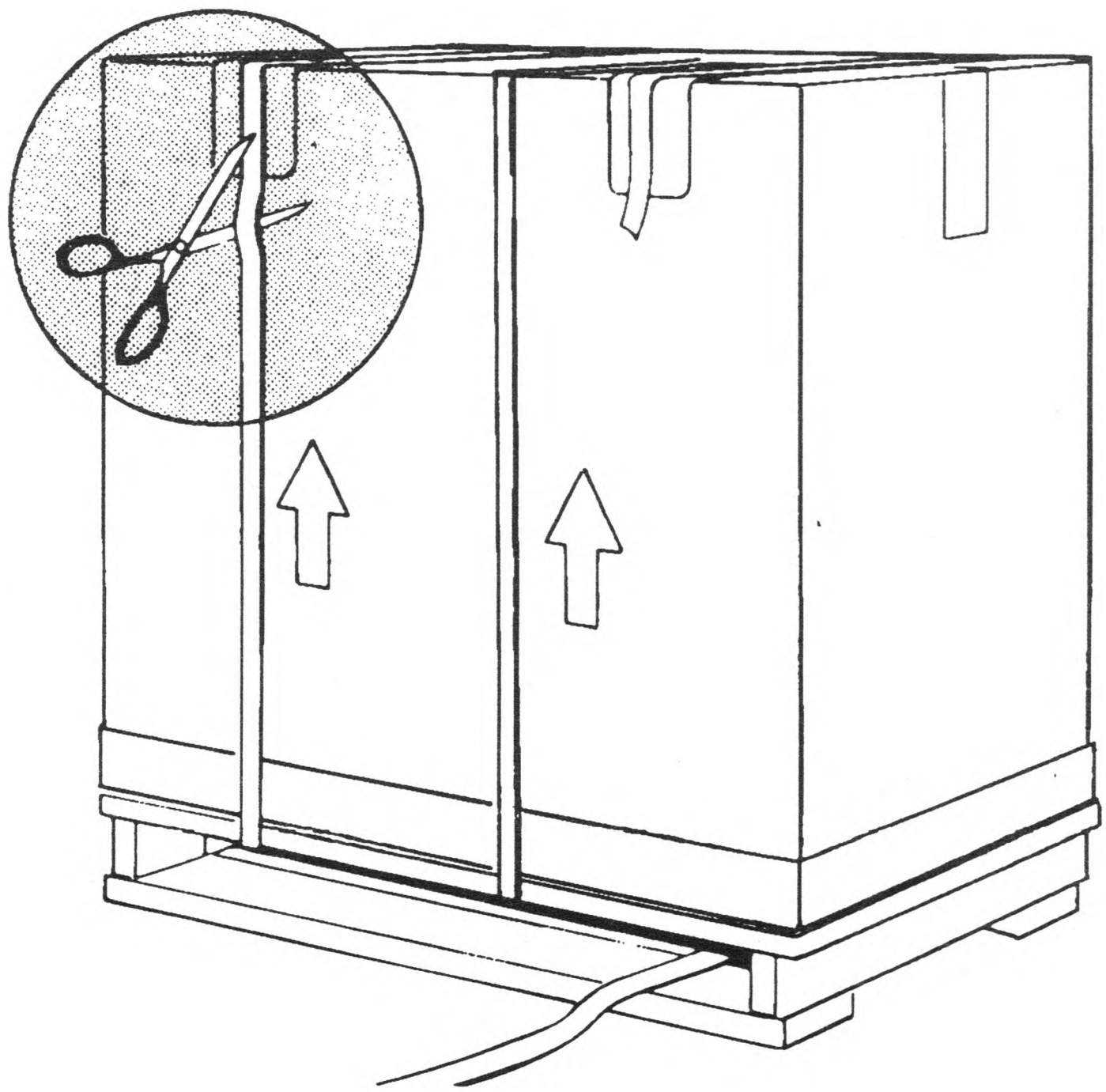

2. Lift the carton off the main unit.

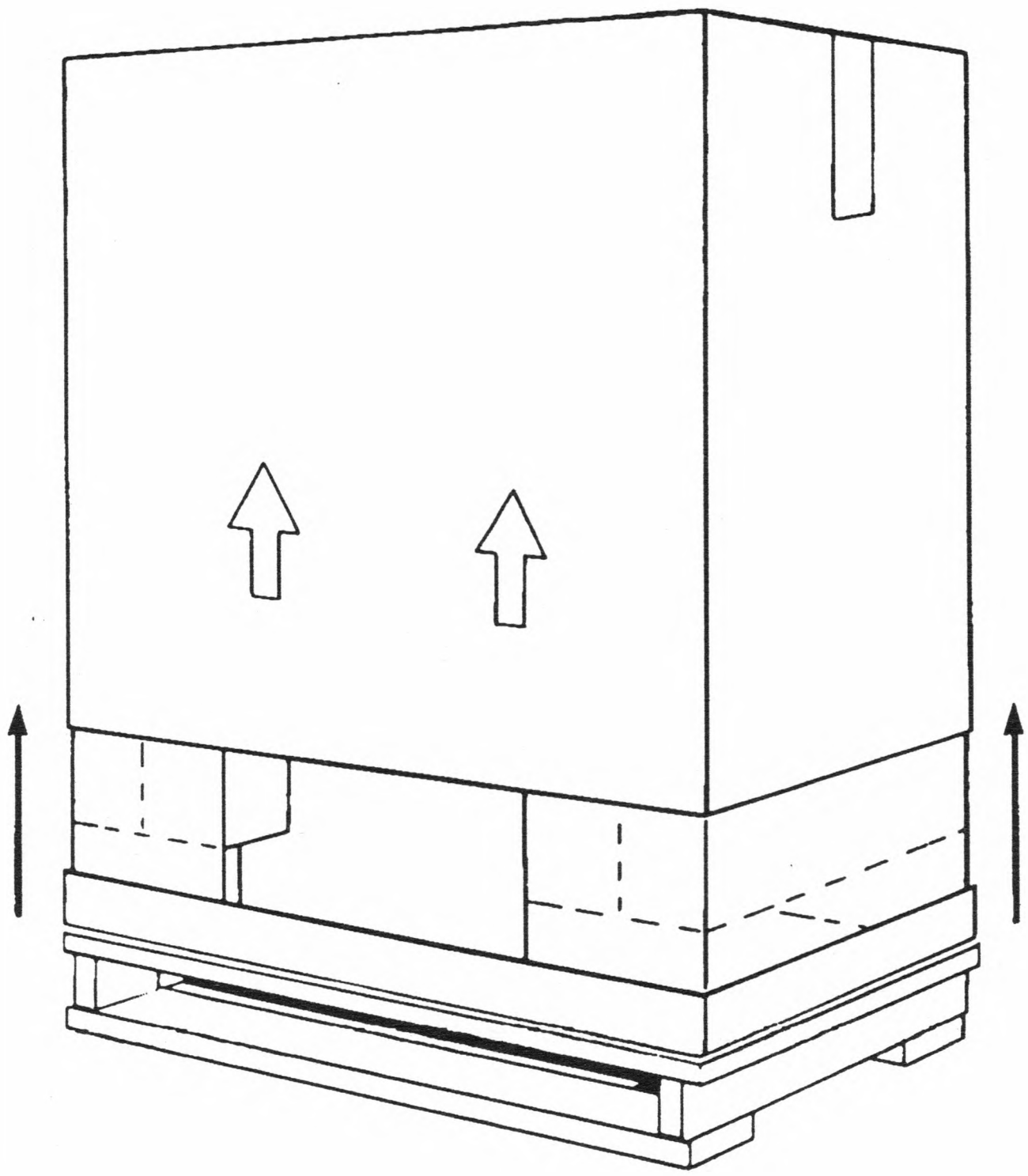

Note: *Depending on which system you ordered, the front panel of your unit may differ from that of the unit shown in the following illustrations.*

3. Remove the top packing cushion, the side packing cushions, and the plastic cover from the main unit and check the unit for damage.

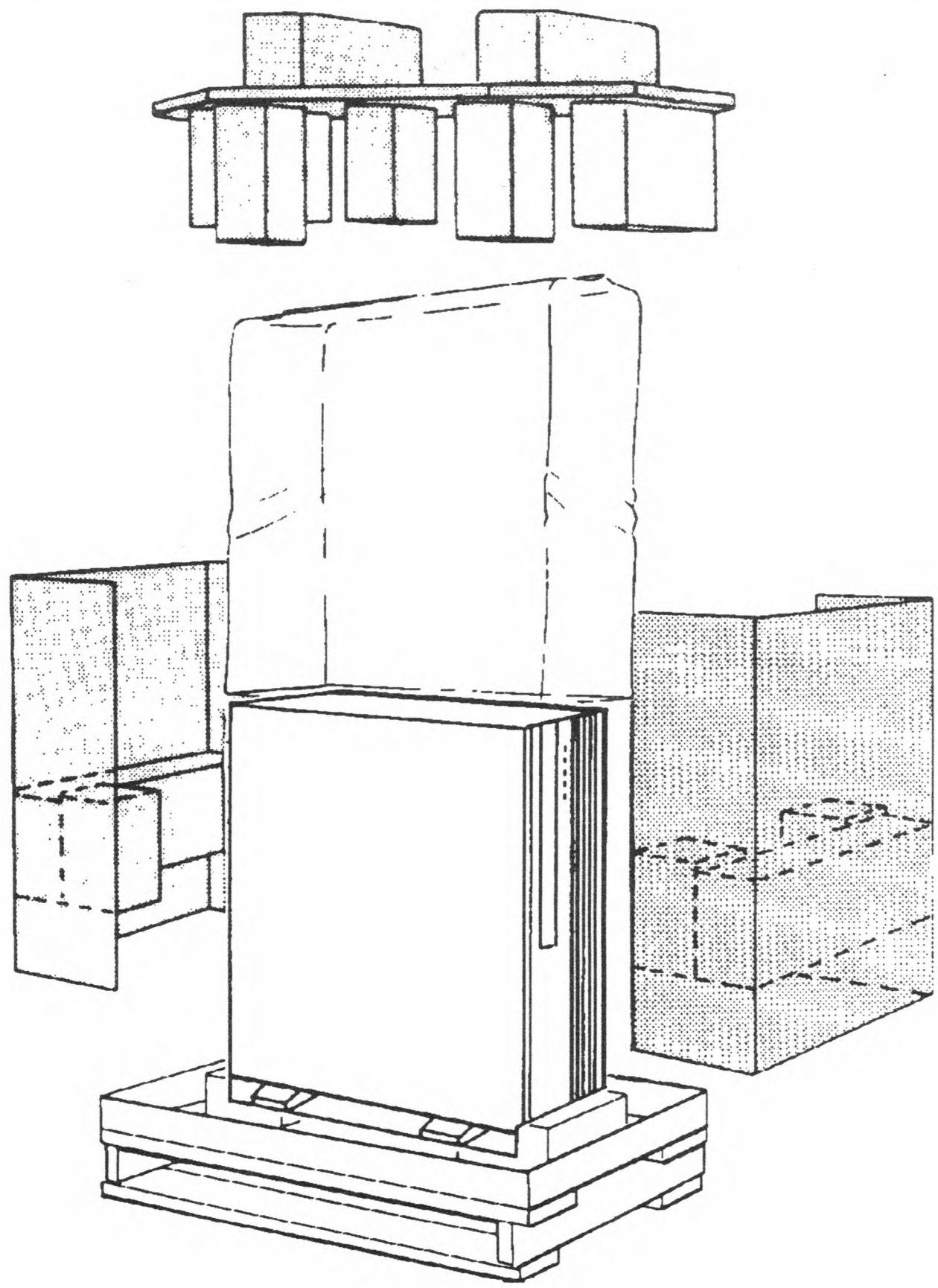

4. Using two people, move the main unit off of the box bottom and shipping pallet and place in the installation area.

WARNING

Be sure to lift the unit by the base, not by the cabinet. This system can weight up to 115 pounds. (52kg). Two people should lift the unit free from the bottom tray.

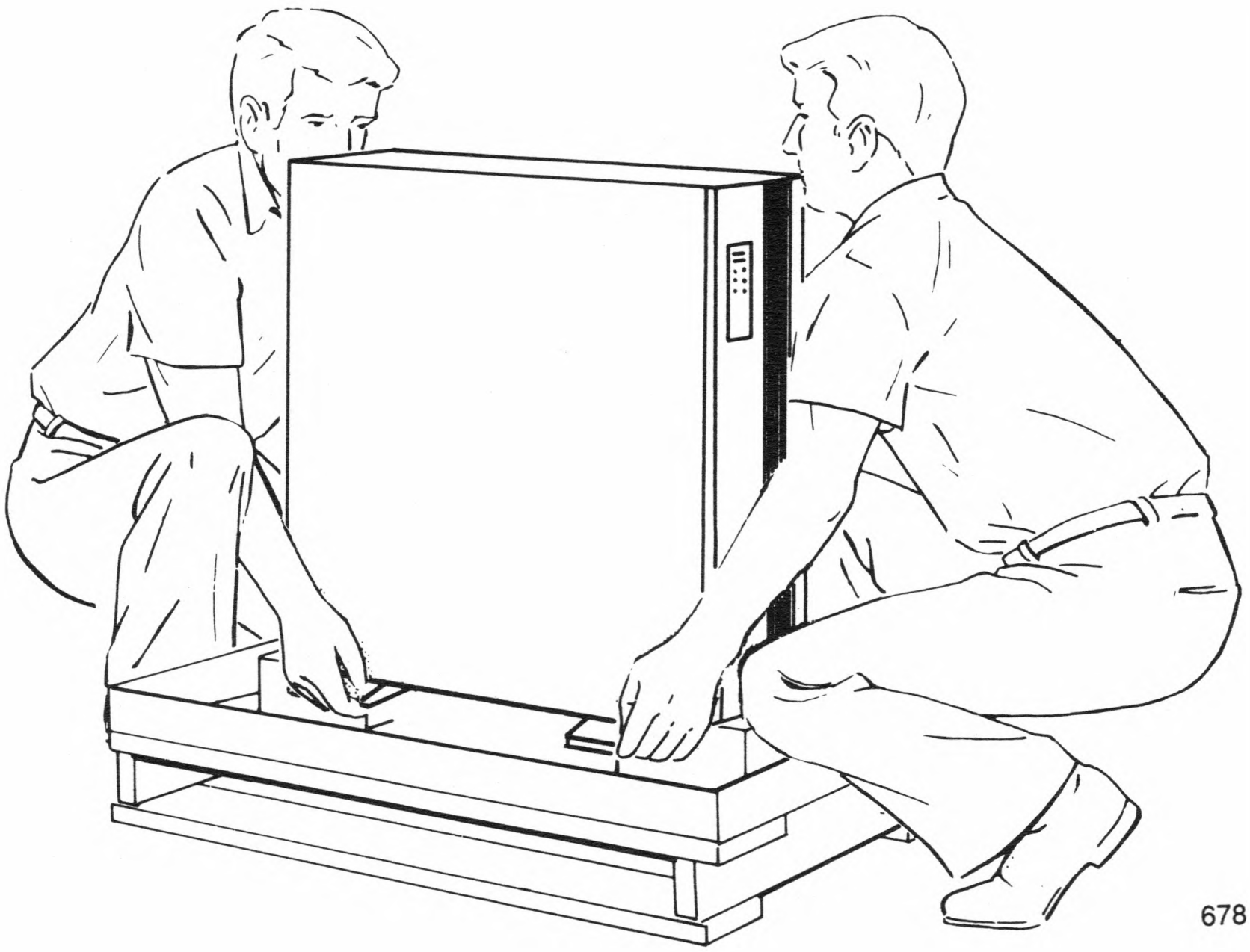

5. Underneath the main unit, you will find a package containing the AC power cord, the battery fuse, and fuse cap. Set these aside for future use.

   If your system has been preinstalled, the operating system tape will be included with this package. If your system has not been preinstalled, the operating system tape will be packed with your documentation, as will any other software you have ordered.

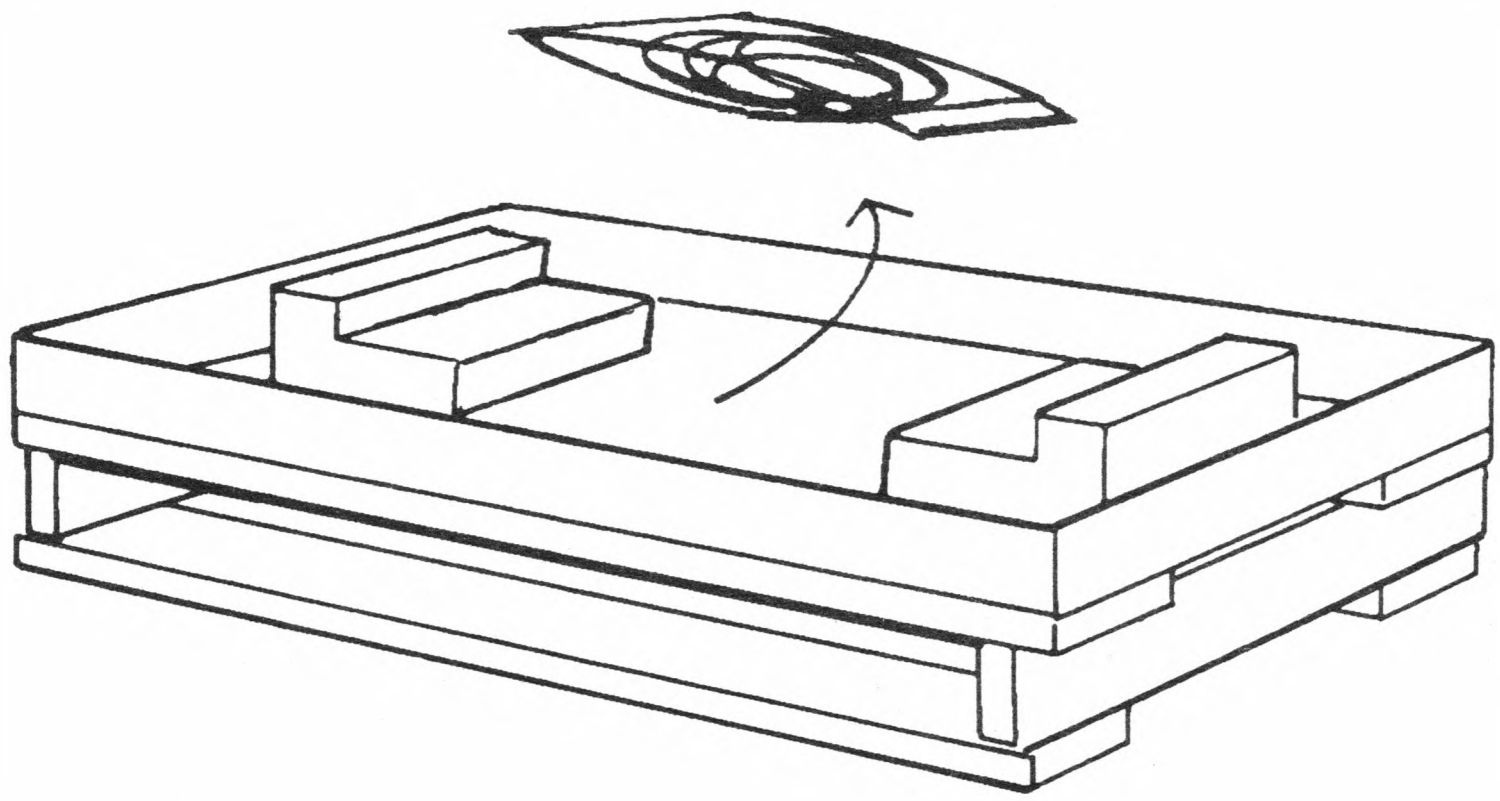

6. If you have ordered a unit with a diskette drive, open the disk door and remove the shipping card.

Repacking a U 5000/30/35/50/55 System

To repack the system, reverse the steps for unpacking and secure the box with metal or plastic bands to prevent it from coming apart in transit.